ISSN 2395-1621

Design & Analysis of exhaust brake system for heavy commercial vehicle applications

#1Sandip Rajput, #2Kamble D.P, #3Kondhalkar G.E

1rajputsandipme@gmail.com
2dattatraykamble@gmail.com
3ganeshkondhalkar@gmail.com

#123Mechanical Department, ABMSPM's Anantrao pawar college of Engg, Pune, India

ABSTRACT

To share the excessive load on the service brakes and for safety of the engine valve trains in downhill gradients heavy duty diesel engines are installed with exhaust brake. The Automatic actuation of exhaust brake will ensure effective utilization of the available engine braking power and safety. A higher braking efficiency will also lead to improved vehicle downhill performance & increases the service brake life due to reduction in fading of the braked discs during continuous application of service brake. This calls for design of constant pressure exhaust brake controlled through the mechanical control system. Its completely new invention to overcome current issues in present exhaust brake system. This project is sponsored by Knorr-Bremse Technology Centre, Pune, India.

In the present work, an attempt to applicate constant pressure exhaust brake controlled mechanism though the control cylinder of exhaust brake system on the heavy duty diesel engine. The completely new concepts are generated based on requirement from customer & made complete system layout with considerations of optimization parameters with the help of Creo Modelling.The evaluation of concepts generated based on Pough matrix criteria. The calculations for exhaust brake performance & for the complete system level are done for the design of complete system and for each individual components. So as to meet the requirement of constant back pressure to produce better exhaust brake performance at variable engine rpm. And same are validated through the CAE structural analysis. The critical parameter of threshold back pressure is maintained through the control mechanism.

The calculations for exhaust brake performance & forces, torque acts due to threshold back pressure on the butterfly valve are done and same are validated through the flow analysis by CFD simulations. During the structural simulation some failures are observed and same are rectified based on result to achieve the requirement. Selection of materials for the different components of exhaust brake system at 600-800°Cel.& selection of manufacturing processes was the toughest challenge particularly for the plastic & rubber components

Keywords- **Service Brake Life, Braking Power, Conceptualization, Control Mechanism, Theoretical Analysis & Simulations, Materials.**

ARTICLE INFO

Article History

Received :11th Ocober 2015

Received in revised form :

12th October 2015

Accepted : 15thOctober , 2015

Published online :

17th October 2015

I. INTRODUCTION

Conventional brake systems are designed to operate in very short periods of time. The continuous use of this kind of system leads to excessive wear on its components. Also,

it causes dangerous overheating of braking plates, affecting driving confidence and security. Another issue related to conventional system is fuel consumption, as the combustion process is kept activated during the brake operation. For long uses, such as extended downhill routes, the amount of fuel burned and the brake components deterioration are considerable.

In order to preserve the conventional brake system and avoid unnecessary fuel burning, the engine can be converted from a power-source to a power-absorbing retarding mechanism. Under usual operating conditions, there are several sources of power dissipation, such as the pumping work (intake and exhaust strokes), rubbing friction and accessories driving. The sum of these factors is the total friction power generated, which aids on engine braking. However, to substitute the use of conventional brake systems, much more braking power is necessary, requiring the development of auxiliary braking systems. Among several kinds of brake systems, the exhaust gases restriction is widely

used, being the concept behind this alternative based on power absorbing during the exhaust stroke.[3]

In this system, the exhaust gases are trapped in the engine by the use of an end flow butterfly valve installed after the turbine exit, at the beginning of the exhaust pipes. When the system is activated, the butterfly valve is closed, avoiding exhausting. The exhaust manifold is then fulfilled with pressurized gases, creating a retarding performance when the exhaust valve opens and the piston is moving upwards forcing the intake air out of the cylinder.

The exhaust valve springs must be well designed in order to avoid valve bouncing due to high back pressure on the exhaust runners. Continuous valve bouncing during brake activation may result in valve seat damages and in some cases, valve breakage. A compromise relation between valve spring preload, butterfly valve leakage and maximum pressure on exhaust pipes shall be achieved.[2]

In the Exhaust Brake System, the ignition and fuel injection are turned off, reducing the amount of power generated on the cycle. However, during the compression stroke, the pressurized air exerts a force on the piston, returning most part of the power to the crankshaft.

II. SCOPE & OBJECTIVE

- To make a concept for exhaust brake system consisting of many sub systems like actuation system, control system, kinematical linkage, valve operation etc.
- To design system suit to the requirement, the major challenge is to select the materials and key parameters of the components. After dimensional lay-outing of the system which will get modelled through the CAD tool Creo.
- To analyse the system theoretical calculations are necessary and to validate the same the system has to undergo for CAE simulations.
- The system should perform the function with the desired input pressure. some failure modes of the system need to be captured and need to consider while designing the components. Selection of manufacturing process is also the learning's from the project. To maintain the design requirements particularly in plastic components like uniform wall thickness, shrinkage etc will be a challenge for design.
- Finally very important the main target to save a cost of product by optimization in the design concepts. Which will be the major concentration which designing the system.

III. METHODOLOGY

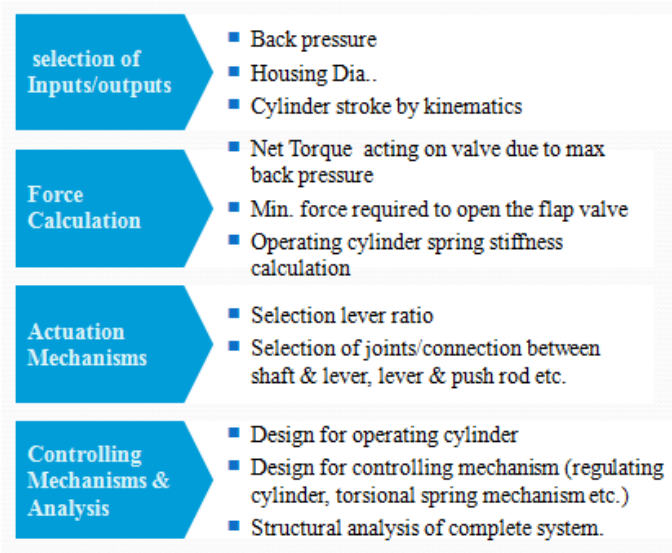

- Calculation for back pressure needs to maintain for braking system. (Bernoulli's theorem)
- Creation of concept layout based on input / output parameters.
- Force calculation due to back pressure. (elliptical couple principle, newtons equations.)
- Design & kinematics of butterfly valve mechanism.& selection of lever ratio.(kinematical equation & lever principle)
- Design for Actuation mechanism.(pneumatic /hydraulic actuation)
- Design for End Stoppers mechanisms. (fatigue analysis)
- Design for breather /check valve mechanisms.
- Design for each individual components, & structural analysis.

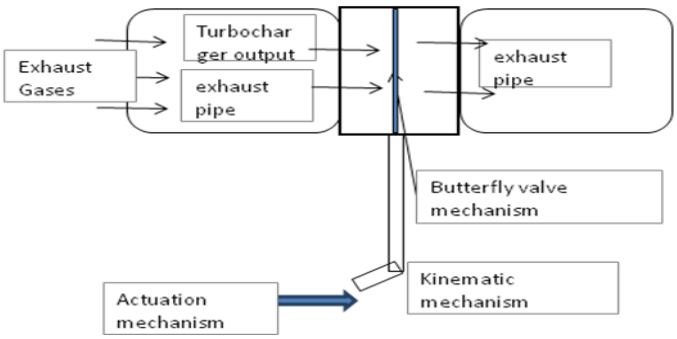

Fig. 1 General layout for breaking force generation from exhaust gas backpressure

- when the butterfly valve mechanism is get closed then exhaust gases coming from turbocharger output are get

restricted due to closed path, because of that the exhaust back pressure get increased upto the threshold limit. The increased backpressure in the engine creates resistance against the pistons, slowing the crankshafts rotation and helping to control the vehicle speed. Overall, this requires less use on the service brakes, which means they last longer and reduce overall costs. Vehicle gets decelerated.

A. Probable Outcome

- The concept development for Exhaust brake which generates the required braking force to assist the primary braking system. Pneumatic actuation system development which will taka care for controlling the valve opening /closing.
- The focus of this investigation is on selection of materials which should sustain the operating temperature condition (200 deg.Cel) also optimization of the control parameters to maintain the constant back pressure at engine side so that the vehicle will get slow down.

IV. DESIGN METHODOLOGY

1. *Back pressure:* The back pressure required to create the exhaust brake force generation is depends upon the threshold limit of the engine on which exhaust brake is operated. This back pressure is calculated based on no. Of engine parameters and for this project the limiting back pressure value is given as 4.5bar. above which there can be abnormal effect on engine.
2. *Housing:* The second parameter as per the design methodology is the selection of Housing diameters in which exhaust brake butterfly valve get mounted. The housing diameters are depending on the turbocharger pipe diameter as which is connected to the turbocharger. In this project the housing diameter is given in input requirement document as 90mm.
3. *Selection of Cylinder Stroke:* the cylinder stroke is the distance required to travelled by the piston & pushrod to close the butterfly valve. This is calculated based upon the kinematics done in Proe software modelling.to decide this, first thing is the modelling of the required components like butterfly valve, housing, shaft, Rivets etc.
4. *The butterfly valve:* is designed based upon the housing dimensions & it should resist the stress generated by the back pressure generated during the actuation of exhaust brake.The important parameter is that shape of housing is circular one and butterfly valve should be mounted in such way that the there should be complete closing of the opening.So to achieve this requirement the shape of the butterfly valve is kept elliptical which gives the complete closing of valve by rotating with some angle. and also easy for assembly as well.The mounting is given at eccentric position which will helps in the closing of butterfly valve by extra couple developed due to the larger area of the butterfly valve. The detailed geometry is explained with the figures.
    1. The shape of the butterfly valve is elliptical shape so that there should be complete contact with the hosing during butterfly valve closed position. The housing is designed based upon the connecting ends of the turbocharger pipe ends.
    2. The calculation for the force generated by the butterfly valve under threshold pressure is calculated as below.
    3. The eccentricity is used to generate couple which will help during closing of the butterfly valve.
    4. Because of eccentricity the complete elliptical area of butterfly valve is divided into two halves which make two different areas. The pressure acting on the butterfly valve halves are same but the force action on the both e the areas are different due to different areas.

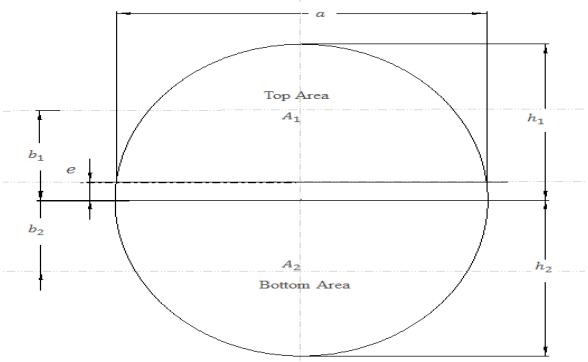

Fig. 2 Butterfly valve geometry

By applying elliptical theory equations the net result are tabulated below.

5. Shaft with Lever: The design of shaft and lever is depends on the transfer of the torque required to close the butterfly valve & it should sustain the stresses developed due to the backpressure development.
6. The lever and shaft are single component made by forging operation. The selection of lever ratio is also dependant parameter on the amount of torque required to close the back pressure & resist the back pressure stress. The output force generated by actuating cylinder is get multiplied with the lever ratio and final output is generated. This lever ratio is controlled by the length of lever.

The actuating cylinder is connected with the lever end with the help of pushrod with connecting link. From the kinematics shown in fig. its shows that the required angle to complete close of butterfly valve and linear distance required to rotate that angle. This linear distance termed as stroke of the cylinder.

TABLE 1

GEOMETRICAL CALCULATIONS FOR BUTTERFLY VALVE

Sr. No.	Parameter	Result	Unit
01	Input back pressure actin on Butterfly valve	4.5	Bar
02	Eccentricity on the butterfly valve	4	Mm
03	Force generated on upper half area.	1826.15	
04	Force generated on lower half area	2149.12	
05	Couple Developed by upper half	45362.95	
06	Couple developed by Lower half	60709.23	
07	Net active couple developed	15346.27	
08	Net force acting on the butterfly valve		

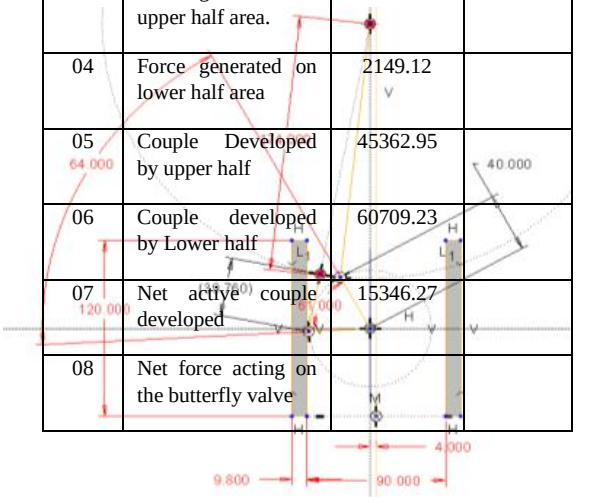

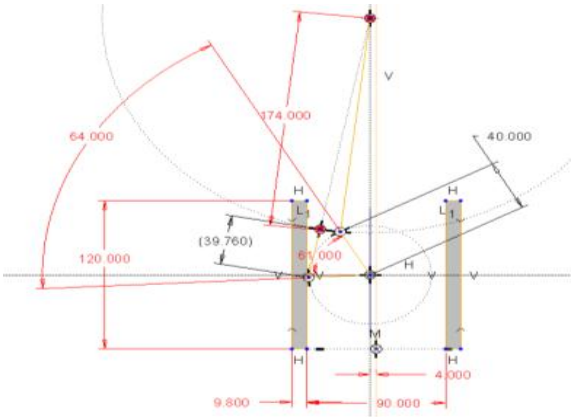

Fig. 3 Kinematics for the Cylinder stroke

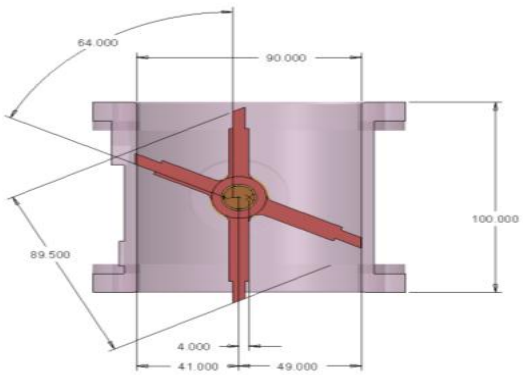

Fig. 4 Kinematics for the Butterfly valve opening angle

5. Design of Actuating cylinder:

6. Design for the connections from Actuation system to the shaft which is connected to the butterfly valve. Actuating cylinder is to be designed based upon the out requirement of the exhaust brake system. As explained in the mechanism the butterfly valve is to be actuated by the actuating cylinder. So the torque required to close/open the butterfly valve is to be delivered by the cylinder. So design of actuating cylinder is depends on the output torque required to close/open the butterfly valve. Actuating cylinder consists of cylinder piston arrangement with check valve & return spring. The input pressure required to actuate the cylinder is the system pressure 5-7 bar. Once the system pressure enters into the cylinder through the input port the pressure pushes the piston.
7. The distance travelled by piston is calculated from the opening angle required to close or open the butterfly valve. The rubber seal is used to avoid the air leakage from the piston.
8. The spring is installed after piston and rested by the spring retainer which is installed at the end of the cylinder. The pushrod is attached with the piston and other end is connected to the shaft with lever with the help of connecting joint. At the end of cylinder wiper is used to wipe the dust resting due to movement of the piston. And the all components are restricted by the circlip fixed in the groove in the cylinder.
9. Selection of cylinder is decided based upon the required output torque major parameter is the cylinder diameter which is selected from the requirement of output force delivered by the cylinder. The piston size and other components are selected suit to requirement.
10. Major challenge is to select the proper material for the cylinder components which should satisfy the 200 deg.cel. the calculation are performed for the each individual components and suitable sizes are calculated. Once the cylinder is finalized the next components as per layout is the shaft and lever which is directly connected to the butterfly valve with the help of rivets.
11. The shaft and the lever are kept single entity for cost reduction purpose. The design of the butterfly valve was also challenging task particularly regarding the selection of material at 600 deg cel. Currently the exhaust brake available in the market is the butterfly valve with orifice. But the main disadvantage of this system is that the when the engine rpm changes the exhaust brake will not give same effect. In case of exhaust brake with orifice the exhaust brake will give effect on particular rpm. As the orifice is designed in such way that the exhaust brake will give full performance at a single rpm. But as there in no change in the orifice opening with respect to engine rpm the leakage rate of exhaust gases are high at low rpm and constant back pressure will not get maintained which leads to the exhaust brake will not perform the efficiently at low engine rpm.The Theoretical calculations for the Actuating cylinder and its sub components are tabulated below.

TABLE 3
CALCULATIONS FOR ACTUATING CYLINDER

Sr. No.	Parameter	Result	Unit
01	Cylinder input pressure	4.5	Bar
02	Cylinder diameter	4	Mm
03	Piston Area	1384.74	mm^2
04	Force action on the piston area	692.37	N
05	Opposing force by return spring	26.69	N
06	Force generated by actuating cylinder	532.54	N

TABLE 4
THEROTICAL RESULTS FOR EBS COMPONENTS

components	Parameters	Theoretical calculations	Material Allowable limit
Cylinder	Max shear stress	2.73 Mpa	250Mpa
Piston	Comepressive stress induced	1.3Mpa	17Mpa
Operating Spring	Shear stress indued	864.97 Mpa	918MPa
Pushrod	Buckling load	4889.08N	465.1Mpa
Shaft	Max shear stress	88.47	183Mpa

Based on the theoretical calculations detailed layout has made and complete geometry is modelled in the Creo Software.

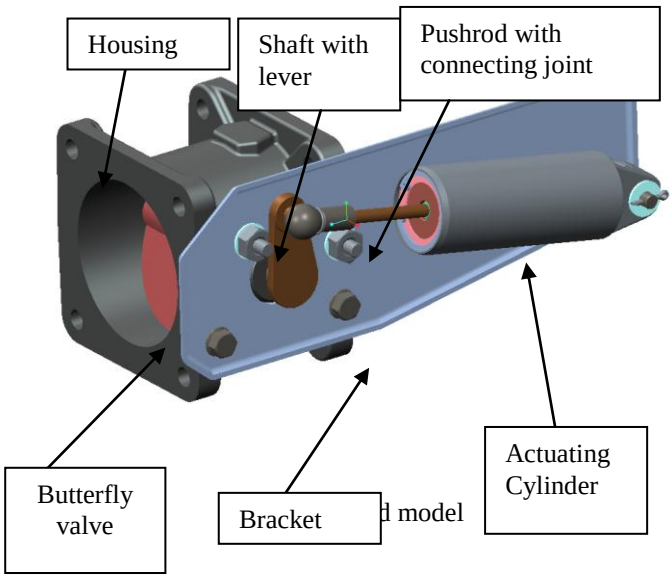

d model

V.FINITE ELEMENT ANALYSIS

Cad model prepared in PRO-Engineer and this is used for the analysis in ANSYS workbench.

Boundary Conditions:

- Max backpressure on the exhaust brake inlet: 4.5 bar, Max pressure inside the cylinder: 13 bar.
- Atmospheric pressure in cylinder: 1 Bar
- Bolt Pretention: 11000 N.
- Fixed support: Housing mounting hole.
- Thermal condition on Butterfly valve and shaft: 6000C.
- Thermal condition on other parts: 2000C

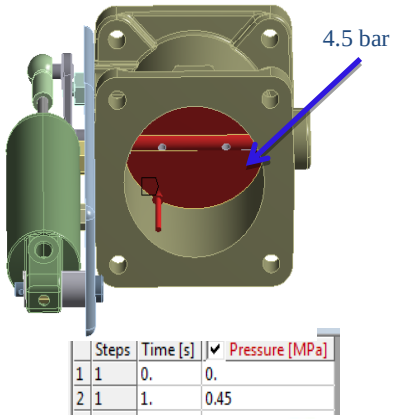

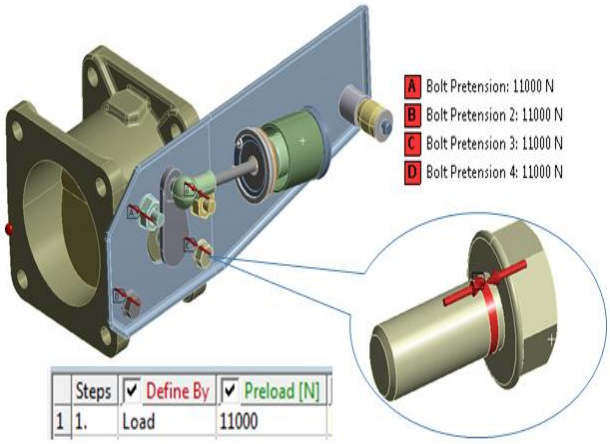

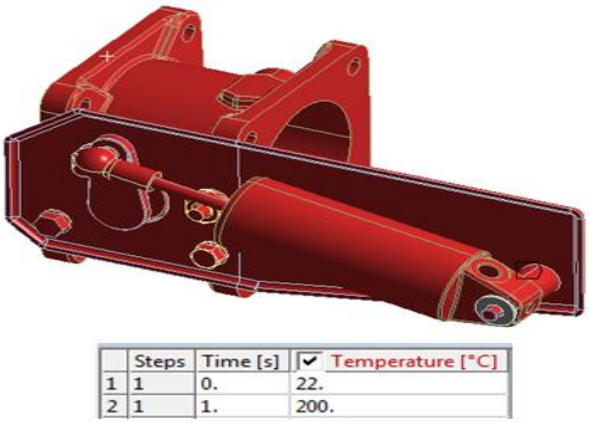

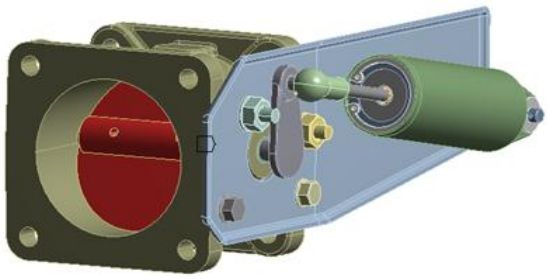

	Steps	Time [s]	☑ Temperature [°C]
1	1	0.	22.
2	1	1.	600.

Fig. 6 Boundary conditions

VI. RESULTS AND DISCUSSION

1. Assembly:

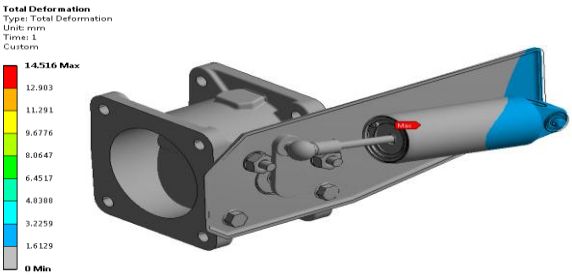

Fig. 7 Total Deformation

From the fig it observed that there is a deformation of the piston due the compression of control spring but at this stroke completion position the control spring should not be compressed. And also there is deformation in plate is observed.

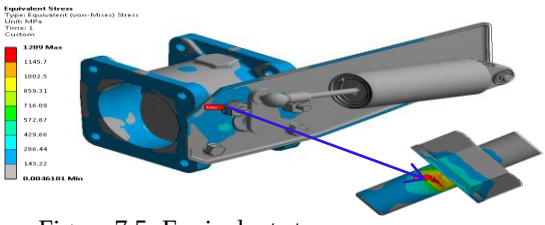

Figure 7.5: Equivalent stress

Fig. 8 Total Deformation

The maximum stress is observed on the boltat the small area where pretention force is applied hence stress is very much high. One approach to dealing with these singularities is to just ignore them. Finite element method allows local inaccuracies, since it is formulated in a way that minimizes the global error in the model.

2. Butterfly valve:

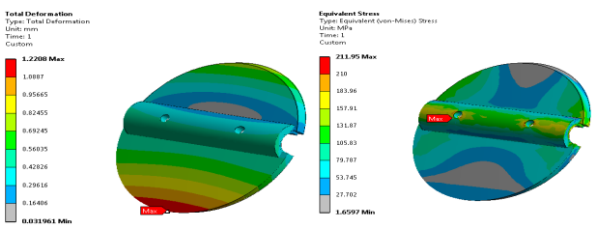

Fig. 9 Total Deformation Fig. 10 Equivalent stress

From the fig it is observed that the deformation in butterfly valve is 1.22 mm and equivalent stress is 211 Mpa at 6000C which is greater than yield limits of the material at that temperature but high stresses are due to singularity. Other than those regions stresses are within yield limit.

3. Shaft:

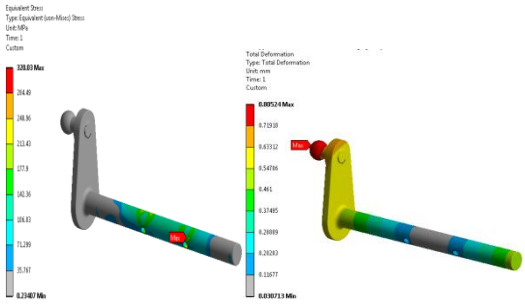

Fig. 11 Total Deformation Fig. 12 Equivalent stress

From the plot it is observed that max equivalent stress induced in shaft is 320.03 Mpa that is less than yield (480 Mpa) limit of the material. Also the deformation obtained is also less. Hence it is safe.

From the fig it is seen that the deformation of shaft is 1.05 mm and max equivalent stress induced in shaft is 190.45Mpa which is higher than yield limit (155 Mpa) of the material at 6000C.Hence this will cause failure of the shaft.

4. Bracket:

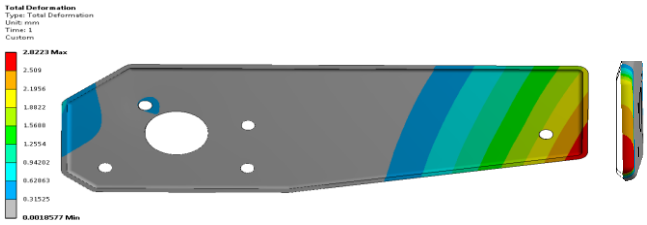

Fig. 13

From the plot it is seen that there is deflection by 2.96 mm at the rear end of the bracket. As per application requirement the deflection in the bracket should be less than 1 mm also it could effect on fatigue life

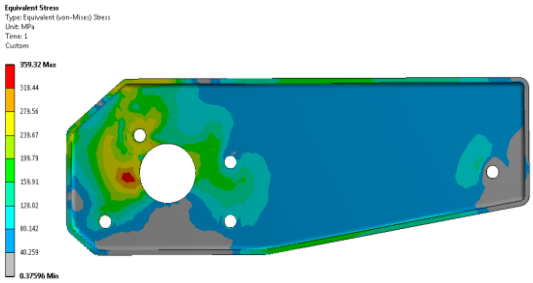

From the Plot it is observed that the max Equivalent stress in the bracket is 333.13 Mpa, Which is higher than the yield limit of the material. Hence the plate will fail.

5. Push rod:

From the plot it is observed that max equivalent stress in the push rod is 465.1Mpa which is less than yield limit (600Mpa) of the material and the deformation at one end is 1.04 mm.

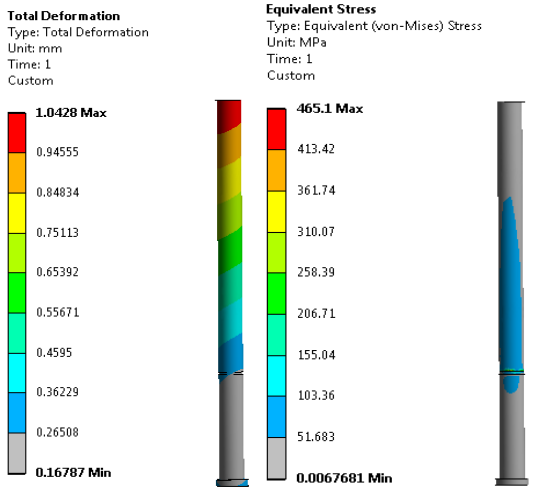

Fig. 15 Total Deformation Fig. 16 Equivalent stress

6 Piston :

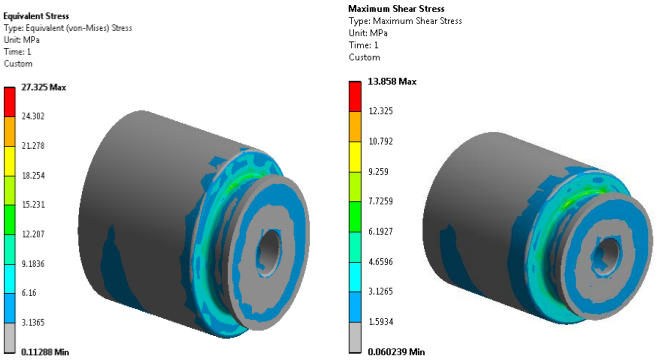

Fig. 17 Equivalent stress Fig. 18 Max Shear

Max Shear stress from the plot it is observed that the max equivalent stress in the piston is 27.32Mpa. It is less than yield limit (41.94 Mpa) of the material. Deformation is 14mm as shown in plot . Max shear stress is 13.85Mpa , it is less than shear limit (25 Mpa) of the material.

7 Cylinder :

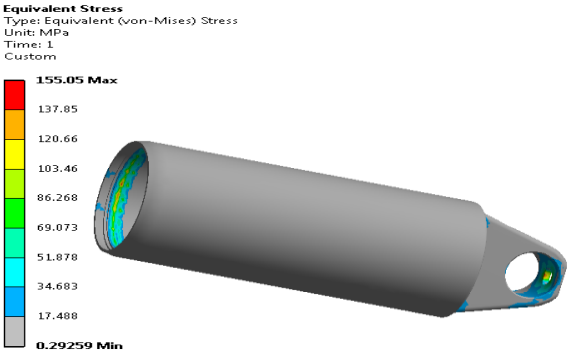

Fig. 19 Equivalent stress

Fig. 20

From the plot it is observed that max equivalent stress is 155.05Mpa, it is less than yield limit (250 Mpa) of the material and total deformation is 2.58mm.

The stress in the shaft is more than the yield limit of the material at higher temperature so to reduce the stresses, there are two options either increase the size of the shaft thereby increasing strength or by changing the material to high strength material. As size of the shaft can't be increase due geometric restrictions hence material of the shaft is change to steel 1.2365 V2.

8. Analysis of assembly for modified bracket and piston:

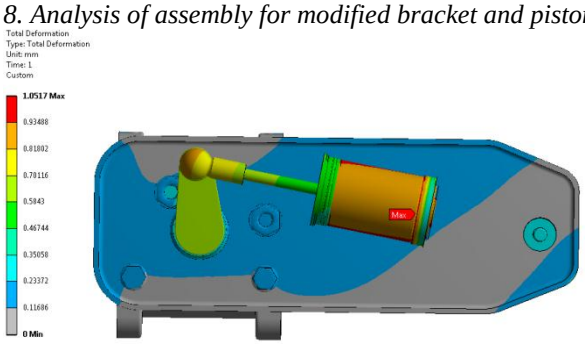

Fig. 21 Total Deformation

From the plot it is observed that max deformation has reduced to 1mm. Hence it will not compress the control spring.

VII. CFD APPROACH

Considering the operating of an exhaust brake it's continuously exerted the back pressure on the engine when it is operated. In the order to safe running of the engine the back pressure is limited to certain value. If the back pressure exceeds a certain limit, the exhaust brake system should release the back pressure on the engine. In order to do this an eccentricity mounted butterfly valve fitted in the exhaust brake system. So due to back pressure, exhaust gases exerts force and Torque on the butterfly valve. In the present thesis the initial calculation for force and torque has to be done on the present existing Exhaust brake system. For the existing product the limiting back pressure is 4.5 bar.

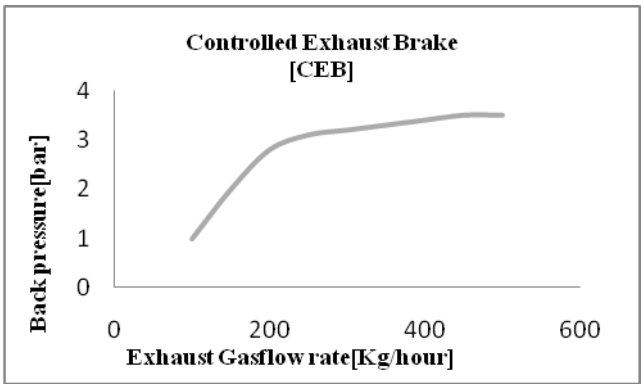

The above graph shows the back pressure for different mass flow rates.

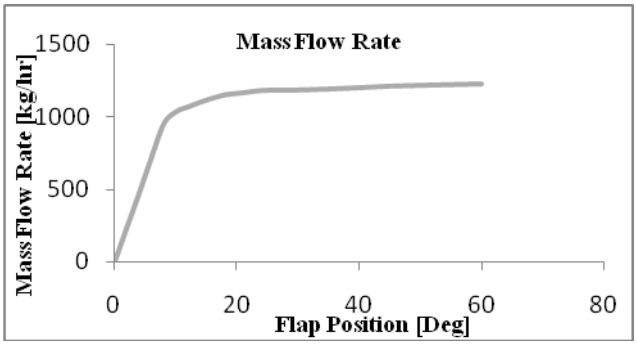

This is the graph that we are getting from customer and we are generating graph for different mass flow rate what is opening angle of the butterfly valve.

The above graph show that for different mass flow rate what is opening angle of the butterfly valve and next we are simulating that condition what is back pressure developed by the system and force exerts by the exhaust gases on the butterfly valve. This is the condition we simulating in the CFD results for different mass flow rate what is the force acting on the butterfly valve.

The main objective of the present thesis is to Simulate the results of existing exhaust brake system for leakages, Velocity , Pressure Drop, Force and Toque Developed the by Exhaust gases flowing over an exhaust Butterfly Valve and Simulation results will be validating by Hand Calculating.

A. Pressure acting on the butterfly valve:

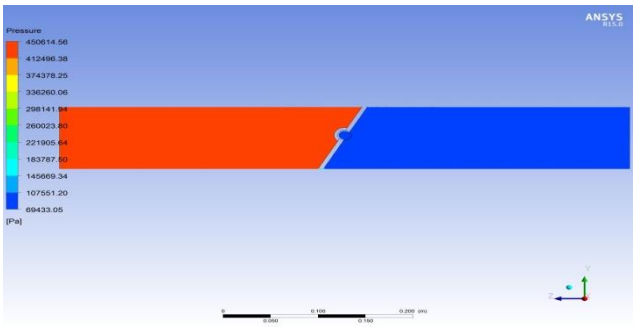

Fig. 22 Absolute pressures before modifying buttery valve

B. Modified Butterfly valve:

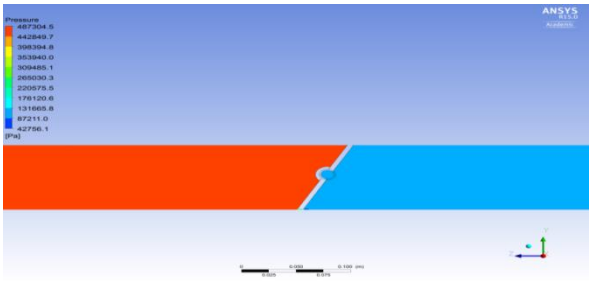

Fig. 23 Absolute pressures after modifying the buttery valve

Before modifying the butterfly valve we have an back pressure experience in 4.5bar only and after modifying the butterfly valve assembly we can absorb the uniform pressure acting on the butterfly valve it increased by 0.3 bar so we get more back pressure in the second case.

C. Leakage of the butterfly valve at complete closing:

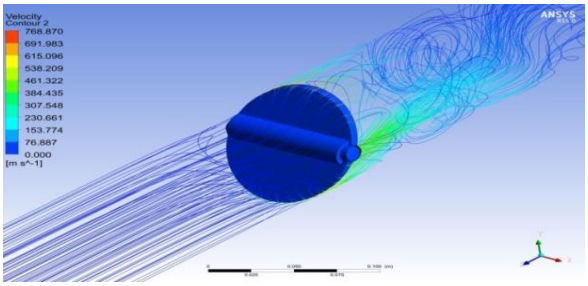

Fig. 24 streamlines view of the swirling vortex after modifying butterfly valve.

From the above we can see the streamlines flowing over the butterfly valve. After modifying the butterfly valve leakage will get reduced.

From the above two images, we can observe that the results will be correct and why because for SST turbulence model the Y plus value should less than 30.

D. Force acting on the butterfly valve

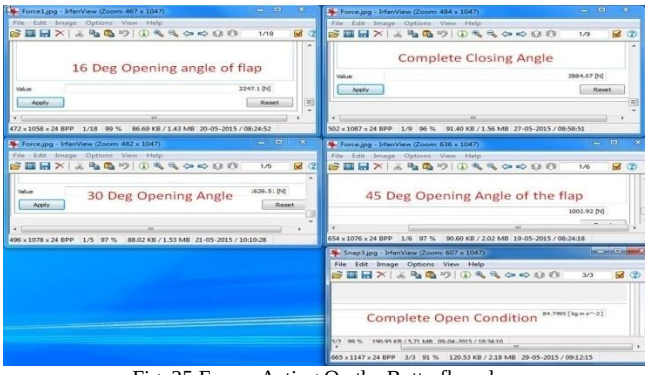

Fig. 25 Forces Acting On the Butterfly valve

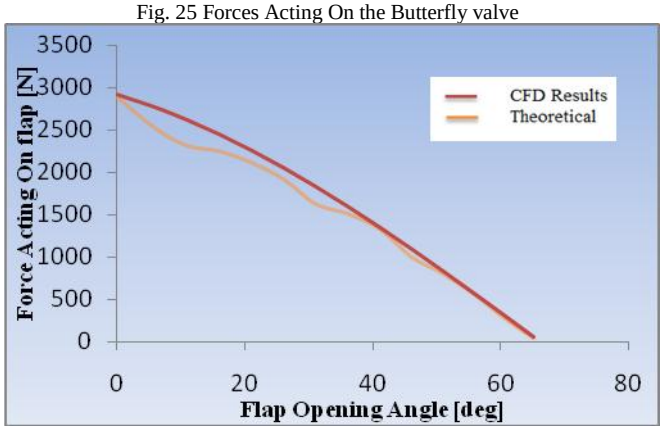

Fig. 26 Net Force v/s Butterfly valve position

From the above CFD results, the total force acting on the butterfly valve at complete closing angle is around 2800 N with the input pressure of 4.5 bar applied. It is normally equals to theoretical calculated values. If the butterfly valve is open by one degree the force acting on the butterfly valve will get reduced. And at normal open position the force acting the butterfly valve is about 50N only.

E. NET COUPLE ON BUTTERFLY VALVE:

The graph shows the torque acting on the butterfly valve for different opening angles of the butterfly valve. It shows that at complete closing of the butterfly valve the torque acting on the butterfly valve will high. When we open the butterfly valve by 2 or 3 deg the torque acting on the butterfly valve

will get reduced linearly because the pressure or force acting on the butterfly valve will reduce linearly.

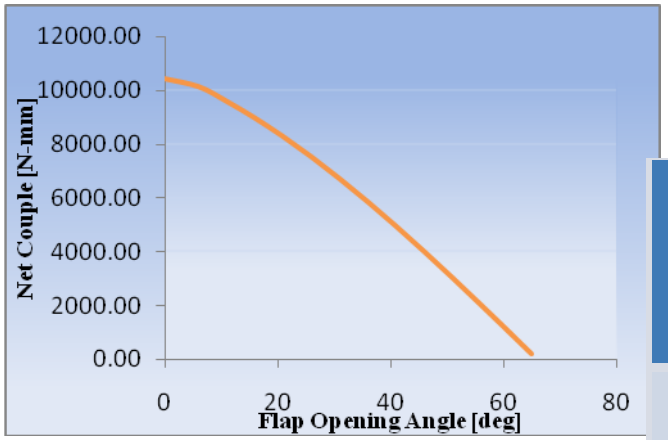

Fig. 27 Net Torque

VII. CONCLUSIONS

FEA Conclusion:

In this project Study of exhaust brake is done, hand calculations are carried out to find the stresses in some of the components. Basic theory of FEM is studied. Firstly the component static structural analysis is carried out for butterfly valve, shaft, and spring linear buckling analysis of push rod to find out critical load it can take and is correlated through hand calculation. It is shaft is safe for buckling load It is also observed that there is deflection at the rear end of bracket by 2.8mm and stresses are greater than yield limit of the material. Hence the design of the bracket is modified and the flange length of the bracket is increased from 3mm to 9 mm, this reduces the stresses and deflection in the bracket. In this way the optimization is carried out.

CFD conclusion:

Over all in this thesis different mesh Element sizes and different turbulence models are studied for better and faster computational convergence Solution of our exhaust brake system. The recommended mesh size element for this problem is medium mesh size with body sizing of 3mm; face sizing of 1mm, ended sizing of 1mm and first layer thickness of 0.01 mm and with growth rate of 1.25 for 5 layers. And recommended turbulence model for this problem is The Shear Stress Transport (SST) turbulence model and it was very practical in many industrial complex problems and also it gives better and faster results.

In initial simulation results shows that there is leakage in the exhaust butterfly valve and Hub assembly at complete closing angle. After modifying the butterfly valve chamfer angle and diameter of the housing hub the leakages will reduce and back pressure will increased by 0.3 bar. The Mach number will also get reduced by 0.4 valves its leads to reduce in the velocity of exhaust gases so that we can get the high exhaust back pressure and less turbulence And it was found that the Force acting on the butterfly valve for complete closing angle is 2800N and this valve nearly equals to theoretical calculated values. From that torque acting on butterfly valve at a complete closing angle was10 N-m. By modifying the butterfly valve and hub assembly we can achieve the 8% improvement in the force and 1 % improvement in the torque.

TABLE 4
SUMMARY OF RESULTS

components	Parameters	Theoretical calculations	Material Allowable limit (Mpa)	CAE validations (Mpa)
Cylinder	Max shear stress	2.73 Mpa	250	155
Piston	Compressive stress	1.3Mpa	41.69	27.32
Operating Spring	Shear stress	864.97	918	784
Pushrod	Buckling load	4889.08N	465.1	4269N
Shaft	Max shear stress	88.47	230	97

From the above result is has concluded that the theoretical calculations are validated with CAE simulations and found in acceptable limit.

REFERENCES

[1] Design and Application Of ECU controlled constant pressure Exhaust Brake on 5.7 I Engine For ICV Application. SAE-2013-26-0125published :2013-01-09. By Srivastav V, Mahesh P,&S.patil.

[2] Developement and Evaluation of an Exhaust Brake system for Light commercial vehicles. SAE2005-26-063,DOI:10.4271,published:200-01-19,byDr.K.C.Vora,P.M.Khan,K.Rajkumar.

[3] Development & performance analysis of Exhaust valve Brake for Diesel engine through 1D simulation.SAE 2008-36-0129 published:2008-10-07,by Peixto V, TrindadeI,Andreatta E &Barbieri.

[4] Control System For Exhaust Brake Lawrence Joseph Heine, Bethlehem, Pa., assiguor to Mack Trucks, Inc., New York, N.Y., a corporation of New York . Filed Oct. '3, 1956, Ser. No. 613,647 7 Claims. (Cl. '192—3)

[5] International Journal of Mechanical And Production Engineering, ISSN: 2320-2092, Volume-2, March-2014 "Engine Exhaust Transfer

Connection Design Based On High Back Pressure In Exhaust Brake Applications" presented by ShailaSarda, & R. S. Bindu.

[6] United States Patent [19] ~ [111 4,061,215Ishikawa [45] Dec. 6, 1977 Engine Exhaust Brake Controlled By Transmission And Accelerator

[7] Four-Cycle Internal Combustion Enghne With Exhaust Brake Richard Kioss, Koln-Buchforst, Germany,' ,assignor to 'ilii-iichncr-Humhoidt-DeutzAktiengeseilschaft, Koln, Germany Filed Dec. 3, 195'), Ser. No. 856,986

[8] United States Patent Kinerson et al.US006179096B1 (10) Patent N0.: (45) Date of Patent: US 6,179,096 B1 Jan. 30, 2001 Exhaust Brake Variable Bypass CircuitInventors: Kevin Kinerson, Vernon; Greg Davies, Sufield; Norman Schaefer, Pleasant Valley; S0tir Dodi, Windsor, all of CT (Us).

